UTILITY CONSTRUCTION

HA-0002

UC-3A

NORTH CAROLINA
DEPARTMENT OF TRANSPORTATION
TRANSYLVANIA COUNTY

UTILITY DESIGN UNIT

UTILITY CONSTRUCTION PLANS ONLY

NORTH CAROLINA PROFESSIONAL SEAL 056439 ENGINEER

DESIGNED BY:	DCR
DRAWN BY:	DCR
CHECKED BY:	LAK
APPROVED BY:	GBH
REVISED:	

UTILITIES ENGINEERING SEC.
PHONE:(919)707-6690
FAX:(919)250-4151

DOCUMENT NOT CONSIDERED FINAL UNLESS ALL SIGNATURES COMPLETED

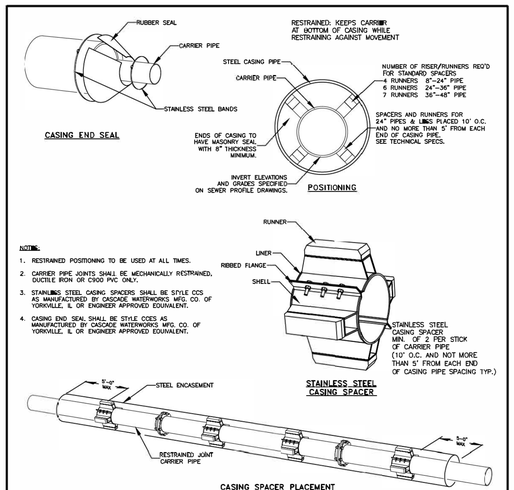

NOTES:
1. RESTRAINED POSITIONING TO BE USED AT ALL TIMES.
2. CARRIER PIPE JOINTS SHALL BE MECHANICALLY RESTRAINED, DUCTILE IRON OR C900 PVC ONLY.
3. STAINLESS STEEL CASING SPACERS SHALL BE STYLE CCS AS MANUFACTURED BY CASCADE WATERWORKS MFG. CO. OF YORKVILLE, IL OR ENGINEER APPROVED EQUIVALENT.
4. CASING END SEAL SHALL BE STYLE CCES AS MANUFACTURED BY CASCADE WATERWORKS MFG. CO. OF YORKVILLE, IL OR ENGINEER APPROVED EQUIVALENT.

SCALE: NOT TO SCALE

CARRIER PIPE IN STEEL ENCASEMENT DETAIL

4/30/2019 11:43:57 AM. mpomraning

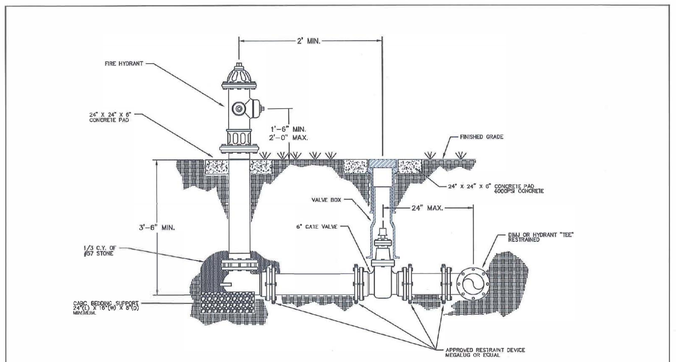

FIRE HYDRANT INSTALLATION

REVISIONS		STD. NO.
DATE	DESCRIPTION	
6/2015	REVISED	

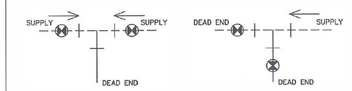

NOTES:
1. WHEN THERE IS ONLY ONE SUPPLY LEG FEEDING TWO DEAD END LEGS, PLACE VALVES ON DEAD END LEGS.
2. WHEN THERE ARE TWO SUPPLY LEGS FEEDING ONE DEAD END LEG, PLACE VALVES ON SUPPLY LEGS.
3. WHEN ALL THREE LEGS ARE SUPPLY,ENGINEER'S CHOICE.
4. CITY MAY DESIGNATE A CURRENT DEAD END LEG AND A FUTURE SUPPLY LEG ACCORDING TO WATER PLANNING AND REQUIRE VALVE PLACEMENT ACCORDINGLY.
5. ON HYDRANT TEE, ONE VALVE IS ALWAYS ON HYDRANT LEG.

TWO VALVES AT A TEE

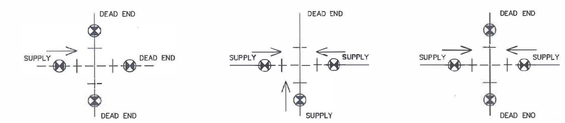

NOTES:
1. WHEN THERE IS ONLY ONE SUPPLY AND THREE DEAD END LEGS, PLACE VALVES ON DEAD END LEGS.
2. WHEN THERE ARE THREE SUPPLY LEGS AND ONE DEAD END LEG, PLACE VALVES ON SUPPLY LEGS.
3. WHEN THERE ARE TWO SUPPLY LEGS AND TWO DEAD END LEGS, PLACE VALVES ON ALL FOUR LEGS.
4. CITY MAY REQUIRE VALVE PLACEMENT BASED ON CURRENT OR FUTURE NEEDS.
5. WHEN ONE LEG AT A INTERSECTION IS A HYDRANT LEG,VALVE MUST BE PLACED ON A HYDRANT LEG. VALVING ON REMAINING LEGS TO BE PLACED AS THOUGH THEY MADE UP A TEE.
6. A "SUPPLY LEG" IS ANY LEG CONNECTED TO THE TREATED WATER SOURCE BY PIPING EQUAL AND OR GREATER THAN ITS SIZE AND SEPARATE FROM THE TEE OR CROSS BEING CONSIDERED.

THREE AND FOUR VALVES AT A INTERSECTION

TYPICAL VALVING CONFIGURATION

REVISIONS		STD. NO.
DATE	DESCRIPTION	
6/2015	REVISED	

GENERAL NOTES:
1. VALVE BOX SHALL NOT CONTACT WATER MAIN OR VALVE.
2. VALVE PAD REQUIREMENTS SHALL NOT BE APPLICABLE FOR IMPROVED PAVED SURFACES.
3. VALVE BOX ADJUSTMENT MUST BE DONE BY ADJUSTING/RAISING THE TOP SECTION OF THE EXISTING ADJUSTABLE SCREW-TYPE VALVE BOX TO GRADE OR BY INSTALLING A NEW VALVE BOX TOP SECTION. THE USE OF PAVING RINGS OR ADJUSTING C.I. SLEEVES IS NOT ALLOWED.

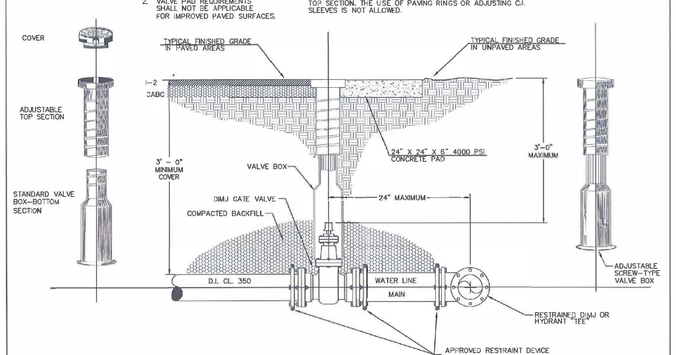

TYPICAL VALVE & VALVE BOX INSTALLATION / ADJUSTMENT

REVISIONS		STD. NO.
DATE	DESCRIPTION	
6/2015	REVISED	

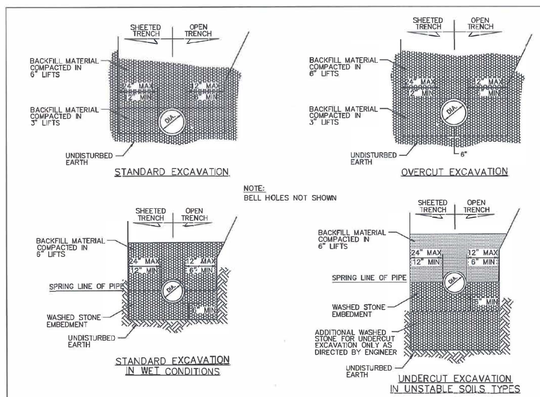

GENERAL NOTES:
1. CONSTRUCTION OF TRENCHES SHALL BE IN ACCORDANCE WITH THE LATEST OSHA REGULATIONS. CONTRACTOR SHALL BE RESPOSIBLE FOR COMPLIANCE WITH ALL APPLICABLE REGULATIONS.
2. NO BOULDERS OR STONES IN EXCESS OF 4" IN SIZE SHALL BE USED AS PART OF THE INITIAL BACKFILL.
3. PIPE BEDDING MATERIAL SHALL BE # 57 WASHED STONE.
4. SELECT BACKFILL MATERIAL SHALL BE CLASS I OR II AS PER NCDOT STANDARD SPECIFICATIONS.

TYPICAL TRENCH DETAIL

REVISIONS		STD. NO.
DATE	DESCRIPTION	
6/2015	REVISED	

REVISIONS